UNITED STEEL
Stay strong.

Nov 2019

Bar Markings

Identifying the different types of bar

Having trouble identifying the type of bar you have on site or in stock?

Occasionally we have customers ringing us wanting to positively determine they type of bar they have, either because they believe bundles have been mixed up in their yard or they have an upcoming building inspection.

The different types of reinforcing bar supplied in New Zealand, by reputable suppliers, will have bar markings allowing the type of bar to be positively identified.

In fact most bar, including plain round bar and Reid bar, will have bar-markings.

In this article we discuss:

- The standards defining Bar Markings
- Various manufacturers' Bar Markings
- United Steel Supplied Bar – the ease of identification

After reading this article you will have an understanding of bar markings and know where to find information on various manufacturers' markings

Copyright 2020 United Steel. All rights reserved
The information in this article was correct at the date of publication & is subject to change without notice

Standards defining Bar Markings

Over the last decade or so, there has been some concerns around the quality of bar supplied in the NZ market and the ability to positively identify the origin and type of bar supplied – just Google "reinforcing bar issues nz"

New Zealand Standard NZS 4671 covers Steel Reinforcing Materials, and describes among other things the preferred dimensional characteristics, nature of bar deformations and how bar should be designated & marked.

Bar is designated by its:

- Shape, where R is round & D is deformed.
- Strength grade, such as 300 or 500 grade, where the number is the yield strength in megapascals.
- Ductility class, where L is low, N is normal and E is Earthquake/seismic ductility. This designation came about due to the need to provide reinforcement with ductility appropriate for earthquake resistant structures
- Size, which is the nominal bar diameter in mm – the standard lists the preferred nominal diameters along with the corresponding cross-sectional area & mass/metre.

Copyright 2020 United Steel. All rights reserved
The information in this article was correct at the date of publication & is subject to change without notice

Reinforcing sold in NZ will typically be 300E or 500E due to the occurrence of seismic events being high. Furthermore, the letter H will usually be used by sellers of reinforcing to denote Grade 500 grade product, e.g. D12 is deformed 12mm grade 300 bar, while H12 is deformed 12mm grade 500 bar

	
Alphanumeric System	
	
Grade 300E	Grade 500E

The standard defines the marking system to be used on the surface of the bars, and states that:

- An alphanumeric system can be used on the surface of the bar that identifies strength grade & ductility class
- A system using a series of surface features on the surface of the bar can also be used. The standard defines and depicts the surface features to be used. For example, a pair of dashes for Grade 300E bar or small section clear of deformation followed by a pair of dashes for Grade 500E bar.
- The markings must be no more than 1.5m apart.
- Deformed bar must also carry unique surface features that allow the manufacturer to be identified.

The images above shows an example of the alphanumeric system, and examples of the marks used for both Grade 300E and Grade 500E bar.

Copyright 2020 United Steel. All rights reserved
The information in this article was correct at the date of publication & is subject to change without notice

Manufacturers' Bar Markings

New Zealand Standard NZS 4671 requires manufacturers of deformed bar to mark their bar with unique markings, so that the manufacturer of the bar can be positively identified.

The most readily available data-base of manufacturers' bar markings in Australasia can be found on the ACRS website. The list of ACRS accredited bar manufacturers and their bar markings can be found here.

The Australasian Certification Authority for Reinforcing and Structural Steels (ACRS) evaluates the product quality and manufacturing processes of steel manufacturers, as it relates to the relevant standards. As such, steel purchasers can have confidence in the quality of steel from ACRS accredited manufacturers.

United Steel Supplied Bar

Deformed Bar supplied by United Steel is easy to identify, as almost all the bar supplied by United Steel is manufactured by Pacific Steel in Auckland. Pacific Steel uses a straightforward alphanumeric marking system, where they:

- Explicitly mark, in plain text, on the bar the diameter, grade, & ductility class of the bar, as shown below.
- Have SEISMIC as a registered trademark, so bars with the word SEISMIC marked on them can be positively identified as being manufactured by Pacific Steel
- Continue to use the bar marks specified in the standard for Grade 300E and 500E bar as shown below, & discussed in the previous section, for their 2 rib bar. The 4 rib bar does not carry the pair of dashes mentioned above
- Have on their website a document that outlines and shows the bar markings for all types of bar manufactured.

Thus, United Steel customers can positively identify the Pacific Steel deformed bar supplied, with ease.

Copyright 2020 United Steel. All rights reserved
The information in this article was correct at the date of publication & is subject to change without notice

Pacific Steel Grade 300E deformed Bar Marking (2-Rib Top & 4-Rib Bottom)

Pacific Steel Grade 500E deformed Bar Marking (2-Rib Top & 4-Rib Bottom)

On rare occasions, to meet demand, United Steel has needed to supply 500E deformed bar manufactured in Australia by InfraBuild Steel (formerly Liberty OneSteel). Bar Markings for InfraBuild Steel Bar can be found on the ACRS website.

Both Pacific Steel & InfraBuild Steel are ACRS accredited manufacturers of hot rolled bar.

Plain round bar and Reid Bar, from reputable suppliers, also carries bar markings. The bar markings for Pacific steel can be found here and those for other ACRS accredited manufactures' can be found here.

The full range of bar available from United Steel can be found here on our website

Copyright 2020 United Steel. All rights reserved
The information in this article was correct at the date of publication & is subject to change without notice

Wondering why the Cut and Bend ordered is different to what was originally quoted or requires modification to do the job?

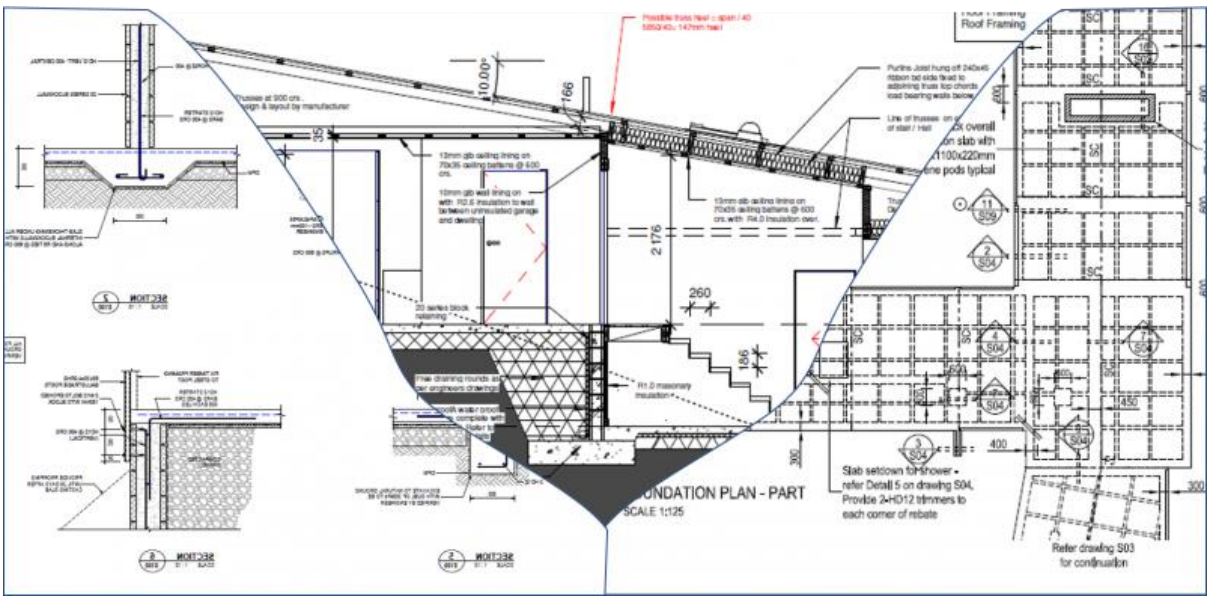

We often get customer queries on why changes have occurred or requesting changes to what is supplied.

Our detailers observed some common reasons for change, which include:

- Initial detail is done from unconsented plans
- Errors & gaps in plans
- Gaps & errors in the specification
- Plans don't align with site conditions

At United Steel we understand that designing and specifying reinforcing is not always straightforward, specifying everything upfront can be difficult and mistakes happen. We also appreciate, our attempts to communicate uncertainties in plans, and the assumptions we subsequently make in detailing, may not always be fully understood. This article looks to demystify some of this.

While there will always be a level of uncertainty, and the odd mistake by us all, we are always looking for ways to improve, and there is much to be said for check twice, measure twice and cut once.

In the remainder of this article we discuss examples of the above reasons for change and provide ways to minimise changes and uncertainty.

Initial Detail from Unconsented Plans

Initial detailing and quoting is often done from a combination of the architectural drawings and structural drawings. Inconsistencies in information can occur due to a lack of:

- coordination between the various parties working on a design. An example is shown below, where the architectural and structural drawings specify different types of mesh

Copyright 2020 United Steel. All rights reserved
The information in this article was correct at the date of publication & is subject to change without notice

- knowledge around the site-specific conditions, such the depth of hard strata, and the length & height of site retaining walls.

The consenting process often removes much of this ambiguity, although in some cases this uncertainty is not removed until work begins on site.

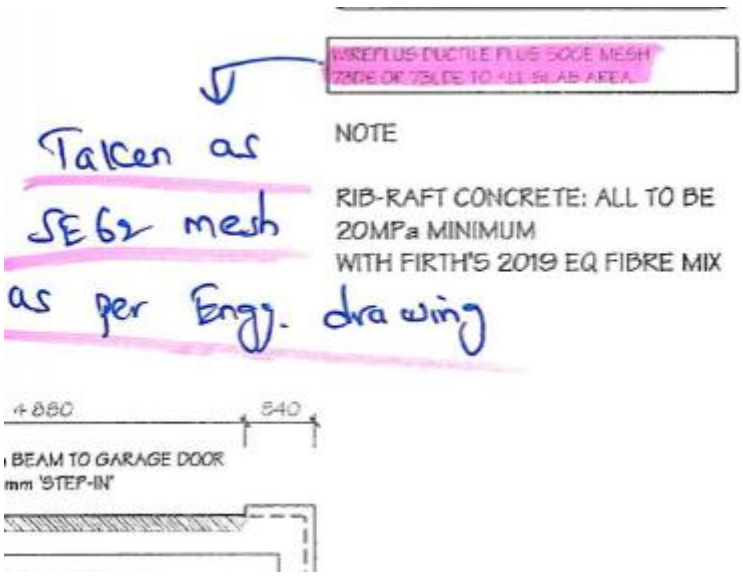	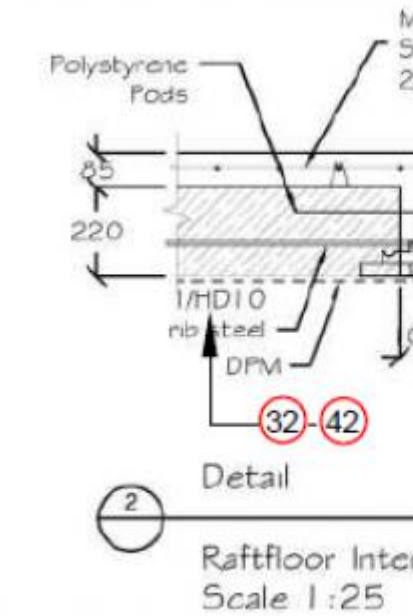
Architectural Drawing – Mesh SE73	**Structural Drawing – Mesh SE62**

The lack of knowledge around site specific conditions can affect the depth of the foundation, which impacts both starter and stirrup lengths, and in some cases can impact the number of bars in the footing. An increase in the number of bars in a footing, as shown below, can have a significant impact on cost, as this additional bar may be required around the full perimeter of the footing. Further discussion on site specific conditions and examples of uncertainty in starter and stirrup length can be found here

Copyright 2020 United Steel. All rights reserved
The information in this article was correct at the date of publication & is subject to change without notice

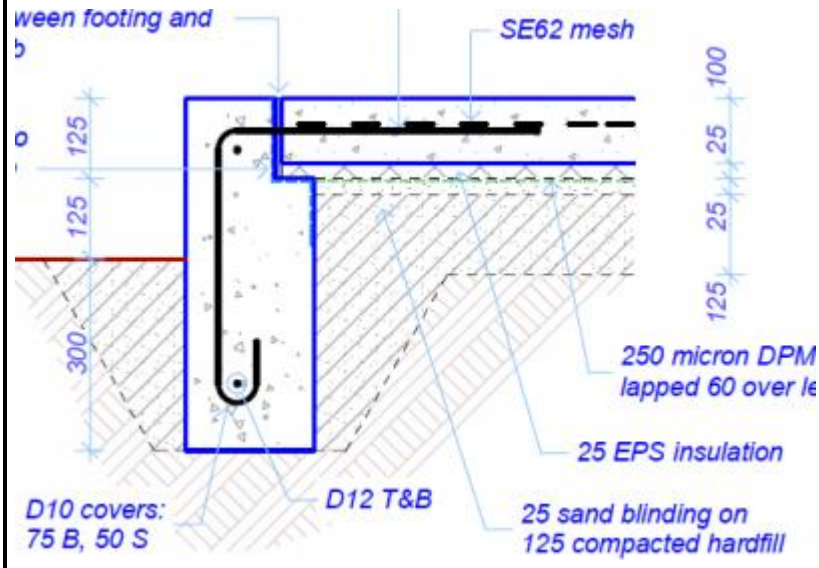

Prior to Consent

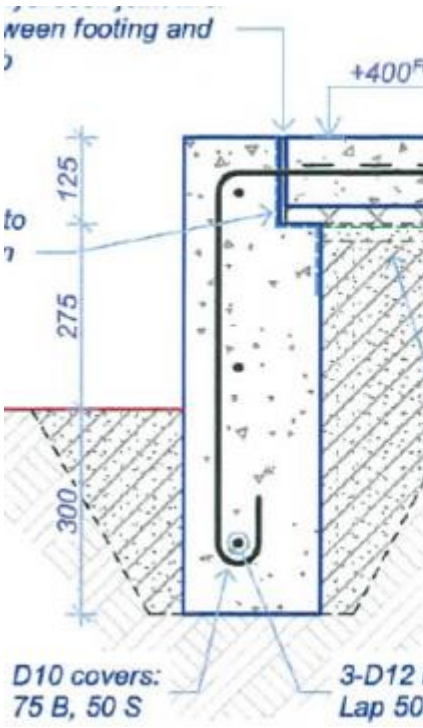

After Consent

Errors and Gaps in Plans

We often find that plans we receive are incomplete, contain errors, or have issues with readability.

Some common issues observed include:

- Missing dimensions in foundation plans, such as lengths and widths of footings, and offsets such as Bay Window projections & those related to Concrete Stair levels or heights.
- Missing dimensions in sections of the foundation, such as the depths and widths of isolated or pad footings used to support columns, strip footings used to support walls and slab thickenings.
- Missing height dimensions, for items such as chimneys, retaining walls, windows, and step changes in floor level.
- Missing information for interfaces such as control joints or where an extension attaches to an existing building. This missing information can be either the location of the joint or the detail of the interface reinforcing.
- A series of incremental dimensions do not sum to the overall dimension provided
- Illegible hand annotated plans
- A mismatch between drawn and written information in the drawings and vice versa. Example shown below.

Copyright 2020 United Steel. All rights reserved
The information in this article was correct at the date of publication & is subject to change without notice

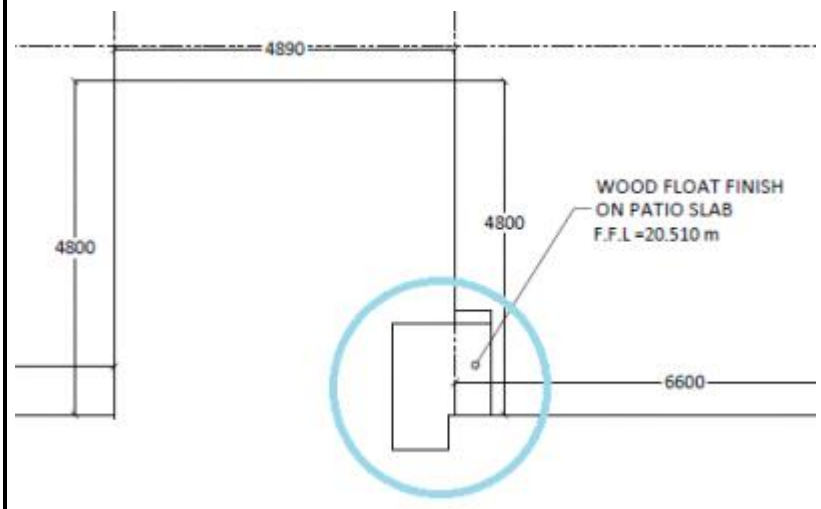

Foundation dimensions missing in architectural drawing

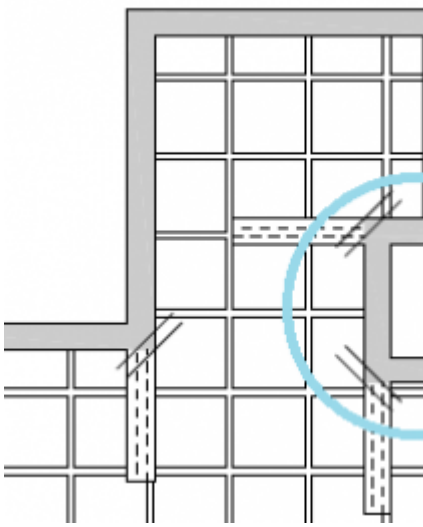

Same foundation dimensions missi

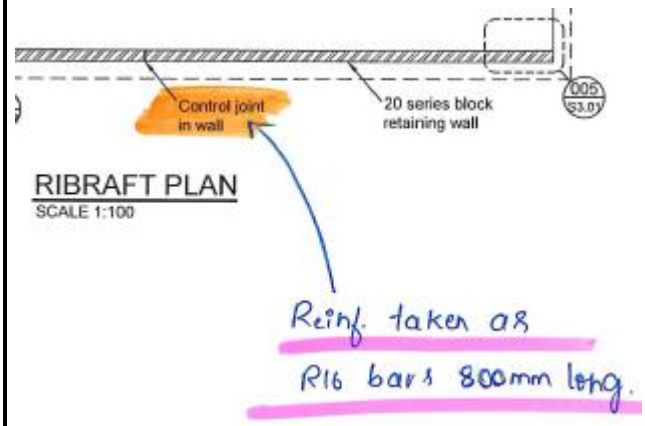

Control joint indicated with no details

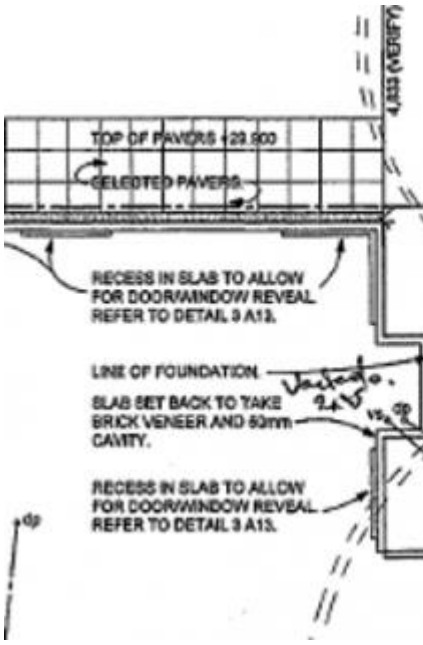

Illegible writing

Copyright 2020 United Steel. All rights reserved
The information in this article was correct at the date of publication & is subject to change without notice

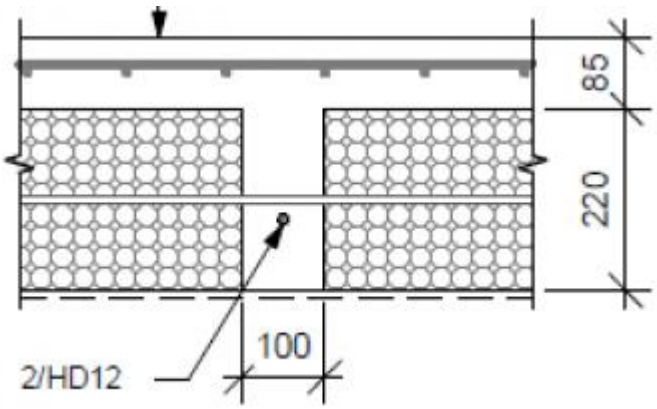

Shows one but mentions two bars - 2/HD12

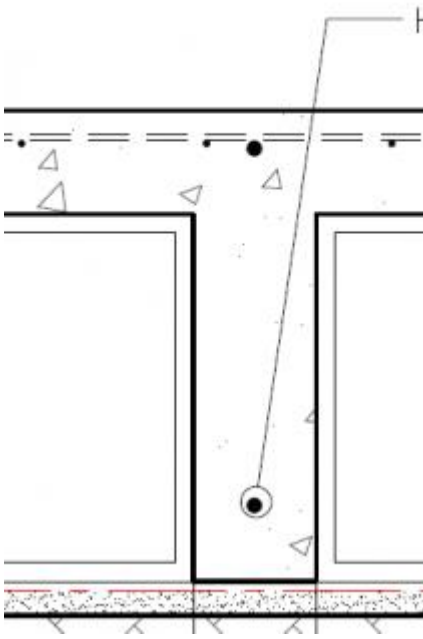

Top bar drawn but grade and diam

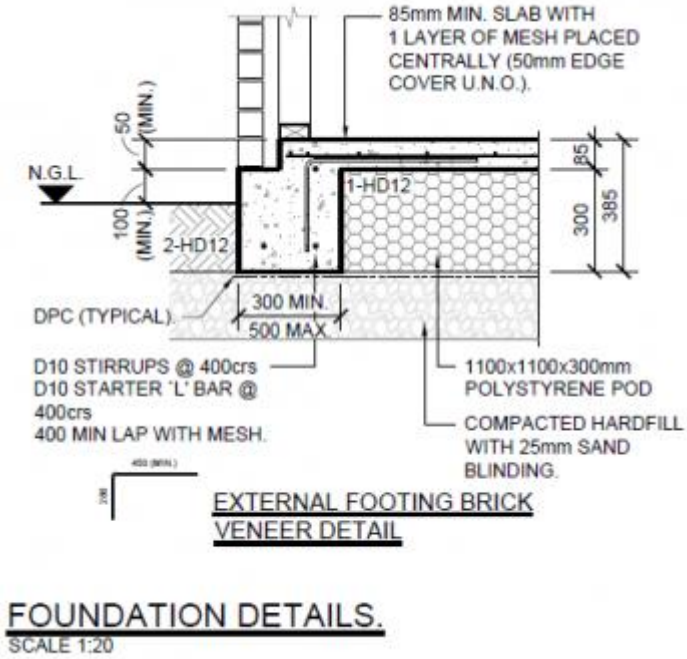

Mentions D10 stirrups but not drawn in footing

Incomplete plans often result from an approach during the design process to complete the detail at a later time, but the intent to come back and finish the detail is forgotten. Common examples are

Copyright 2020 United Steel. All rights reserved
The information in this article was correct at the date of publication & is subject to change without notice

window details, rebate details at openings, nib or raised threshold details, wing wall details and construction joint details in slabs.

Gaps and errors in the Specification

The drawn component of the plans, including the drawn reinforcing detail within these plans, only contain some of the information required to fully detail the reinforcing required. These plans are usually supplemented by written information either on the plans themselves or in a separate specification document, to define the type, shape and quantity of reinforcing.

The gaps and issues we have observed around the specification of reinforcing include:

- The spacing of the reinforcing and its components are not specified, this includes bar spacing, and the regular spacing interval required for starters, stirrups, and links. During detailing we will often make assumptions on the spacing of these items based on typical practice and state these assumptions in the detailing notes – see below.
- Inconsistencies between the drawn information and written information in the schedules or specifications – see below

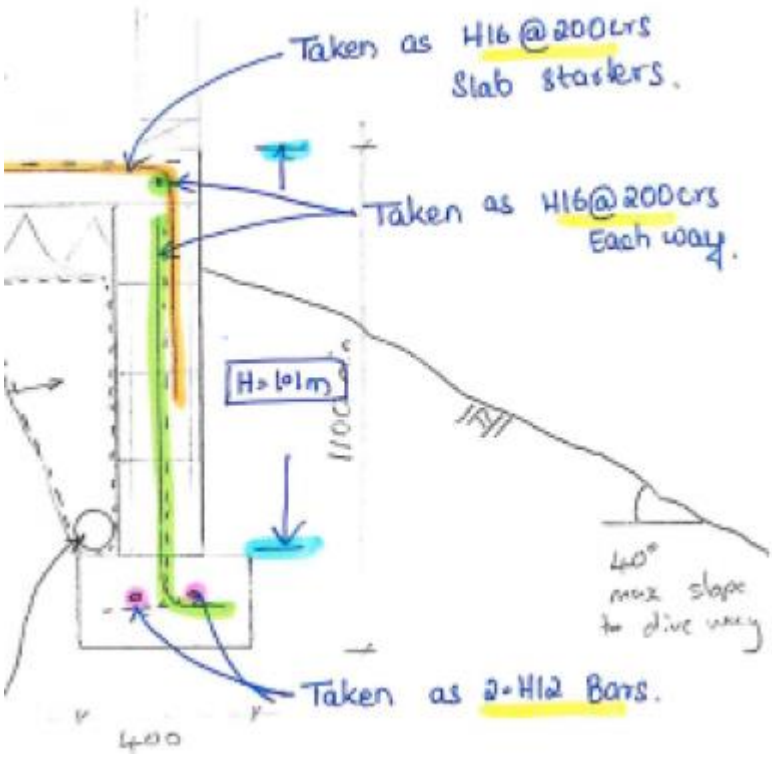	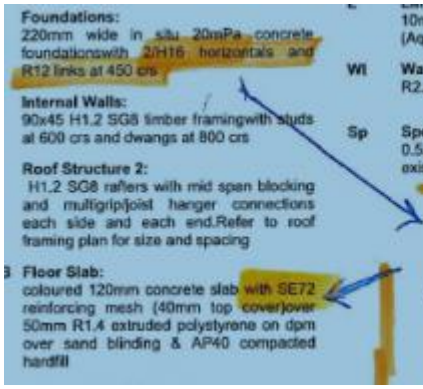
Assumptions required on bar type and spacing	**Specification & drawing inconsiste**

Plans don't align with Site Specific Conditions

Copyright 2020 United Steel. All rights reserved
The information in this article was correct at the date of publication & is subject to change without notice

The ground conditions, site-levels and existing building details are often not fully understood until more detailed investigations are done on site or even until construction commences.

The key issues we observe with the plans not aligning with the conditions on site, include

- The depth of hard Strata being unknown at the time of design, with the plans simply stating the foundation must bear on good ground and the dimensions of the foundation are subject to these ground conditions. The size & quantity of reinforcing cannot be fully determined until the depth of the good ground is determined. As is shown below this uncertainty can impact the height of both stirrups and starters.
- Heights and lengths of retaining & block walls, which often require assumptions to be made about dimensions by:
    - taking the nearest measurement of a related structure and scaling
    - scaling from site plans
    - counting the standard dimensions of blocks & bricks
    - taking the floor to floor heights
    - using the maximum height where an embankment of retaining walls is specified – this results in an over estimation

Copyright 2020 United Steel. All rights reserved
The information in this article was correct at the date of publication & is subject to change without notice

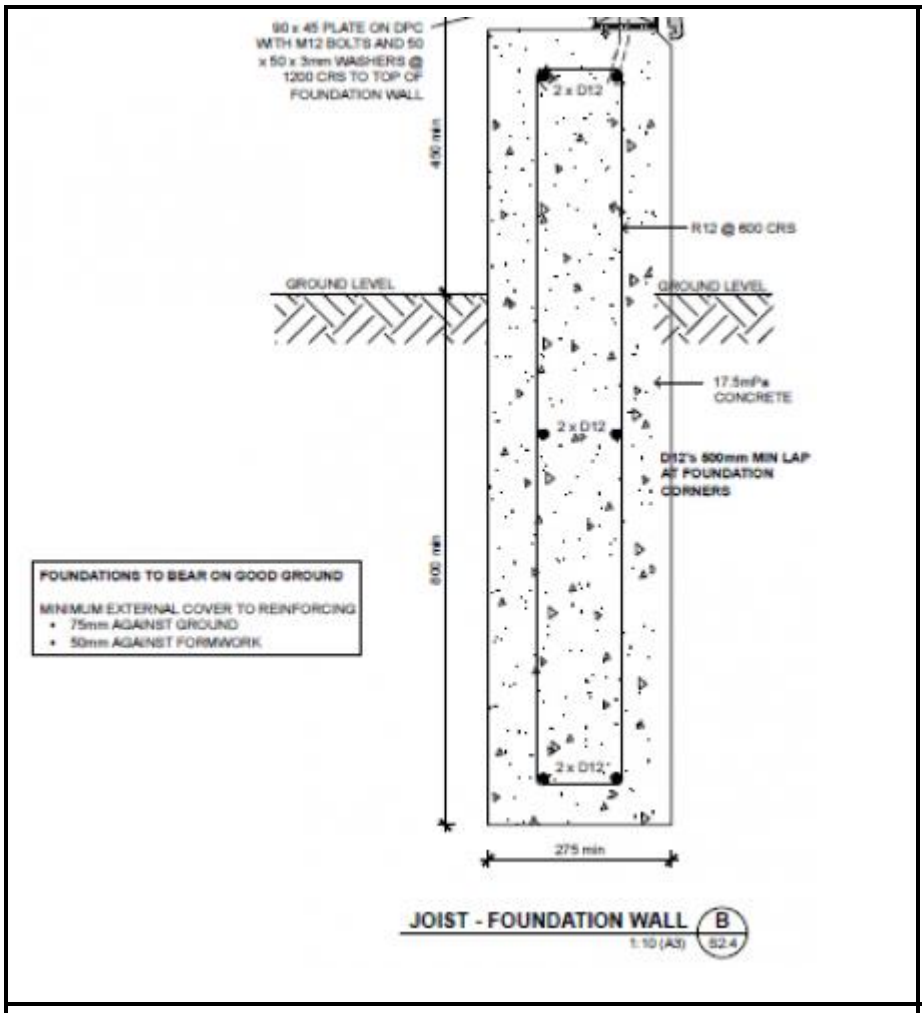

Uncertainty in stirrup height

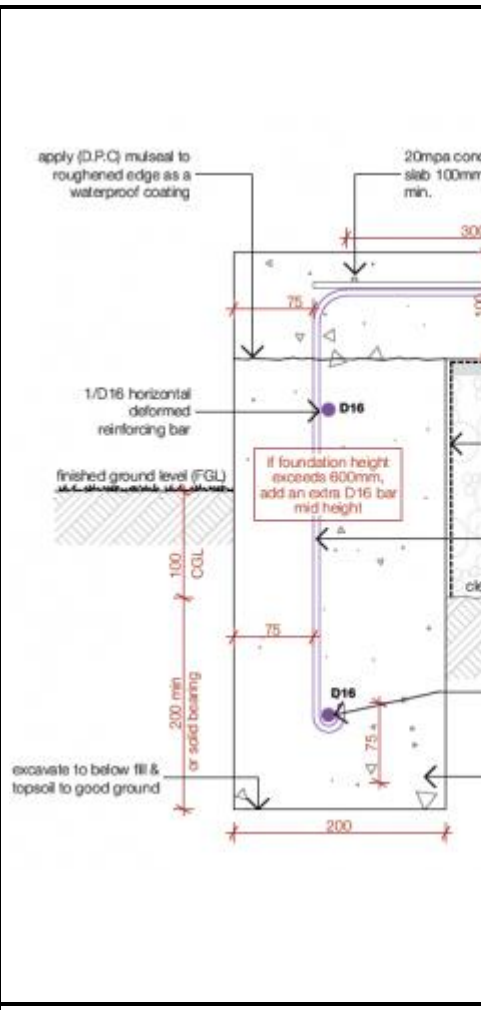

Uncertainty in number of bars

Copyright 2020 United Steel. All rights reserved
The information in this article was correct at the date of publication & is subject to change without notice

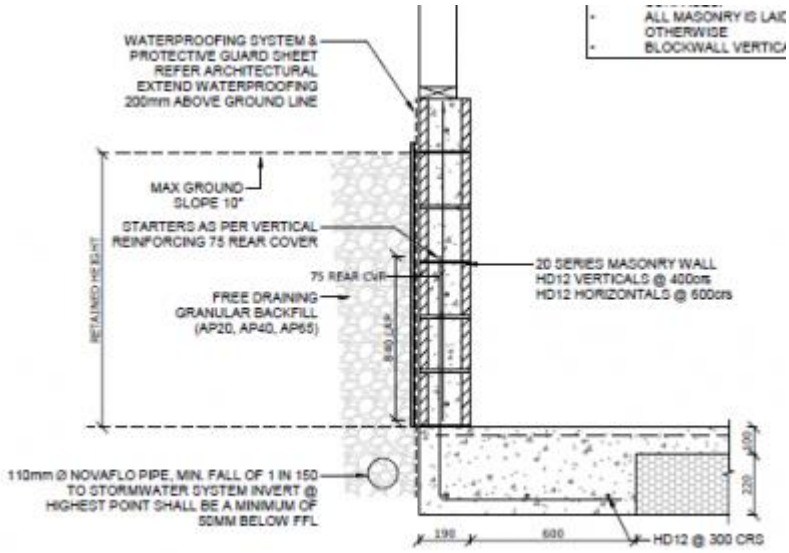

Missing height - Counted Blocks

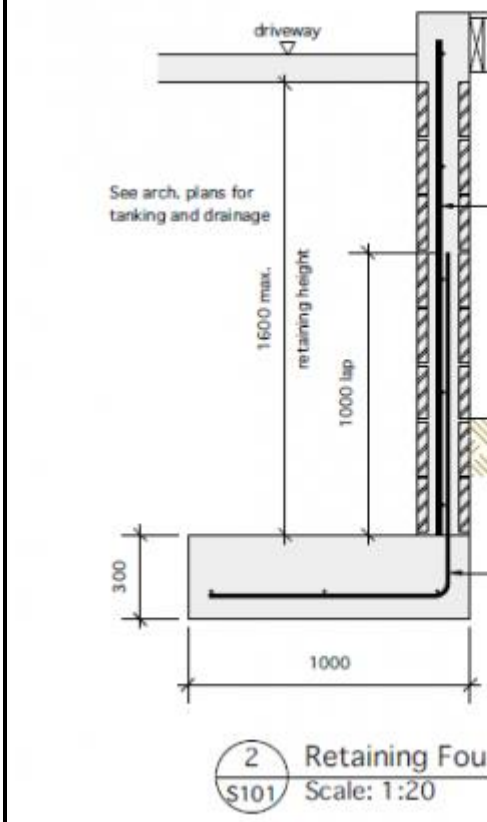

Missing height - Scaled

RETAINING WALL TABLE FOR 20 SERIES BLOCKWORK

H	L	T	vertical reinforcing	horizontal reinforcing	longitudinal reinforcing
up to 1400	1000	250	H12@400crs	H12@400crs	4-H12
1401-1800	1200	300	H16@400crs	H12@400crs	5-H12
1801-2100	1400	300	* H16@400crs	H12@400crs	6-H12

EXTERNAL BLOCKWORK RETAINING WALL - OPTION 1

SCALE 1:20

Refer to Architects drawings for setout dimensions.

Maximum height details opted for external retaining wall

Minimising changes and uncertainty

With the need to estimate costs early in the build process it will not always be possible to resolve all uncertainty in the plans prior to quoting commencing. As a consequence, it is just as important to

Copyright 2020 United Steel. All rights reserved
The information in this article was correct at the date of publication & is subject to change without notice

understand where the uncertainty lies in the plans, what assumptions have been made in detailing and quoting, and what can be done to remove the uncertainty.

To minimise changes and reduce uncertainty:

- Quote & order from consented plans. This should ensure dimensions in the architectural and engineering drawings align, which in turn should remove uncertainty in offsets, floor area and floor level
- Come back to us as soon as possible if we contact you with queries on the plans, and we will work together to resolve the identified uncertainties.
- Check C&B specified for retaining walls and block-walls with site specific conditions – we will provide a marked-up set of plans with assumed wall heights.
- We will send you annotated plans and notes after fully detailing an order, if we have remaining questions, have made assumptions or if missing information prevented detailing a specific aspect of the plans. A site visit may then be required to check assumptions and remove the uncertainty.

In some cases where the uncertainty cannot be resolved prior to delivery, we may supply straight or partially bent bar, with the instruction to make the final bend(s) on site. An example, where this could happen is where extra-long starters are supplied, or crank bars are supplied with one bend, and the remaining bend is put in on site once final dimensions are determined.

Copyright 2020 United Steel. All rights reserved
The information in this article was correct at the date of publication & is subject to change without notice